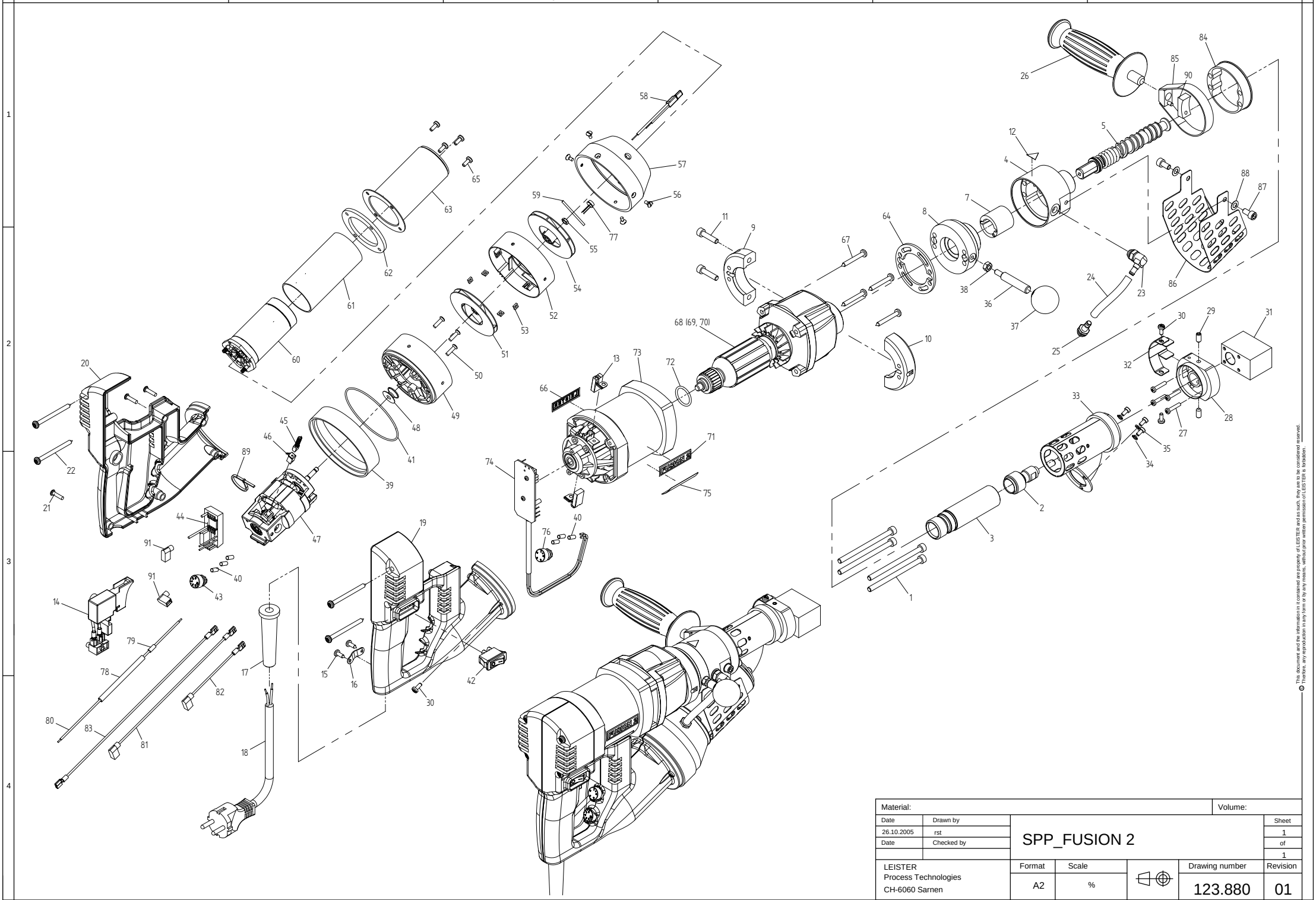

© This document and the information in it contained are property of LEISTER and as such, they are to be considered reserved. Thereof, any reproduction in any form or by any means, without prior written permission of LEISTER is forbidden.

Material:					Volume:
Date	Drawn by	SPP_FUSION 2			Sheet
26.10.2005	rst				1
Date	Checked by				of
					1
LEISTER Process Technologies CH-6060 Sarnen		Format	Scale	Drawing number	Revision
		A2	%	123.880	01